TC-0150
TC-0151

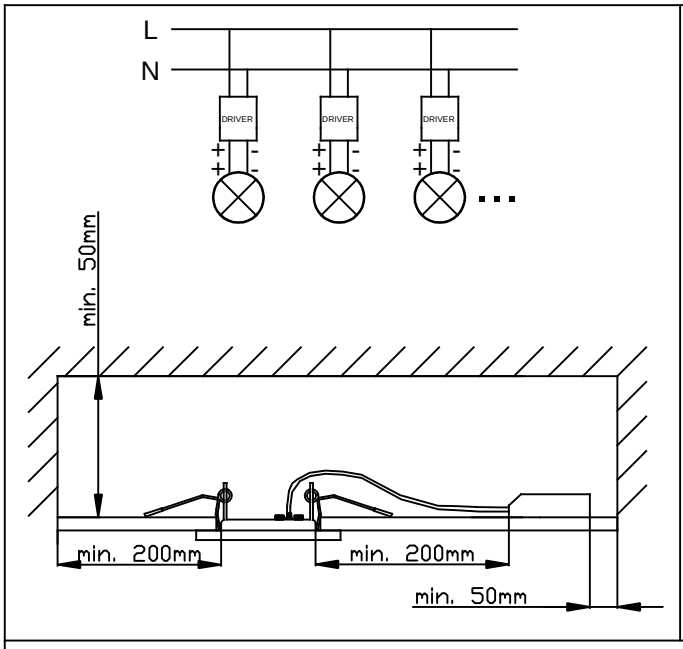

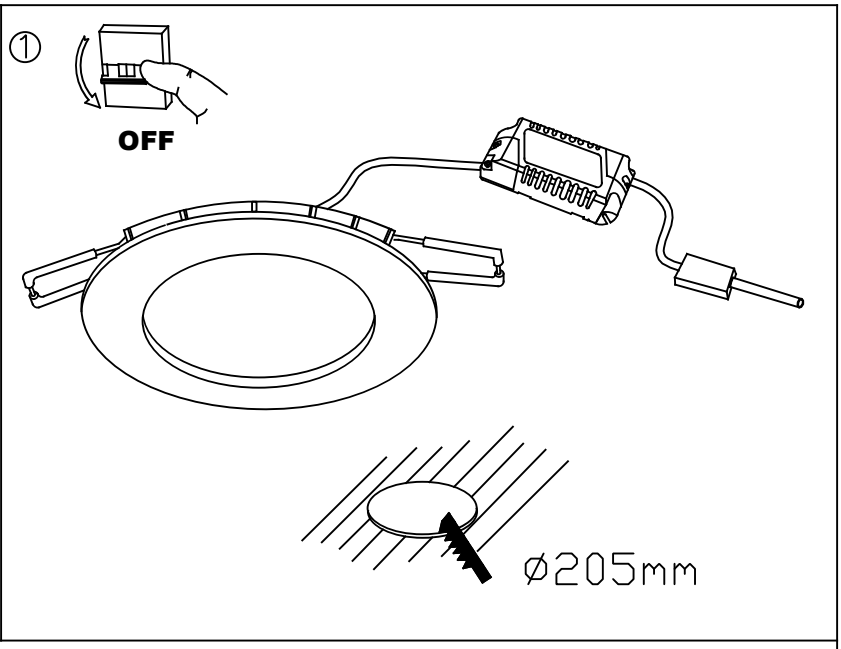

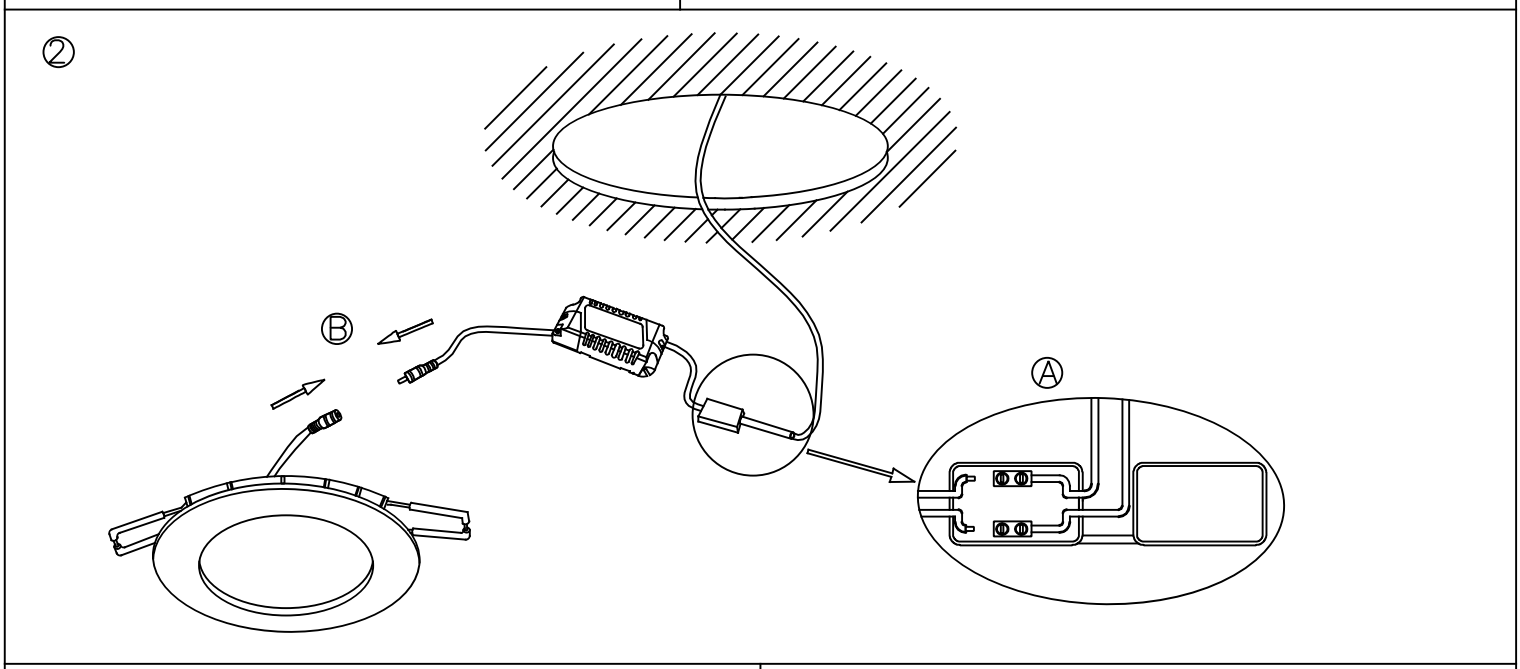

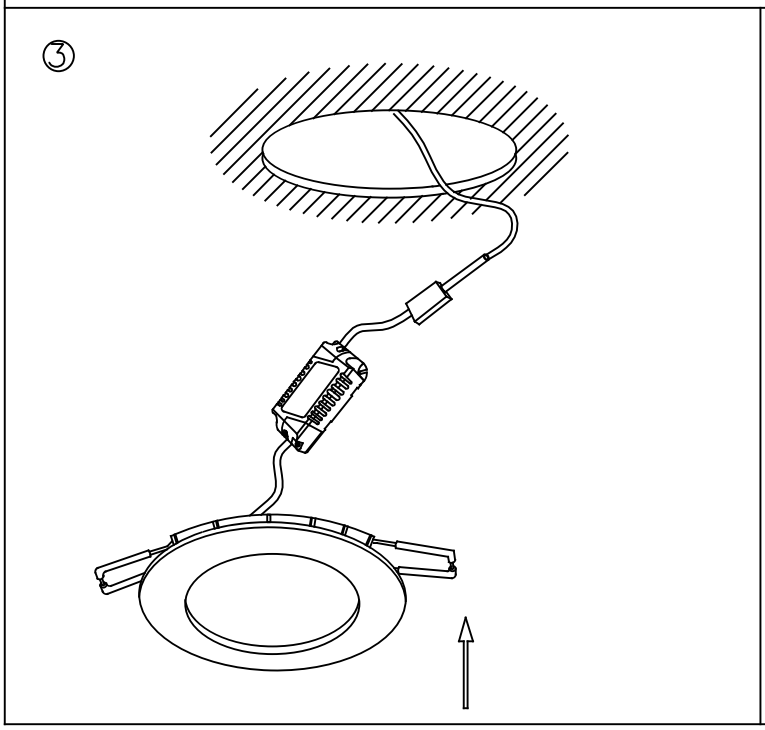

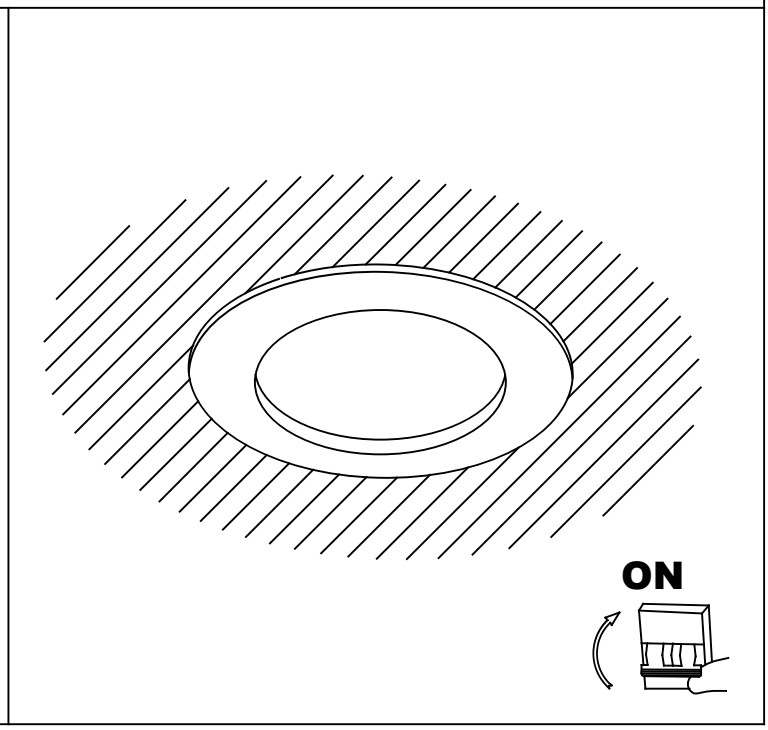

03-03-16